I GROUND POINT (RHD)

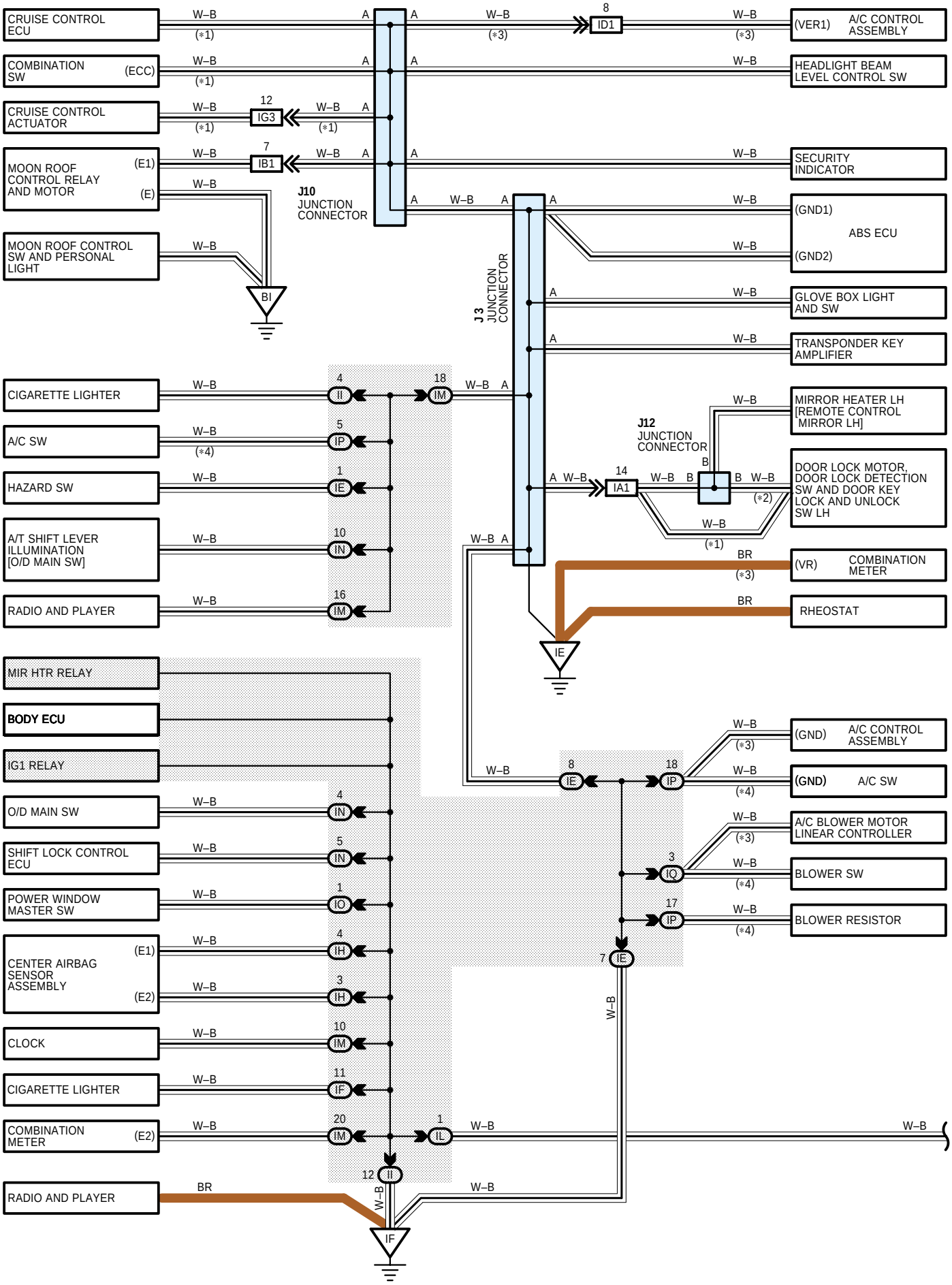

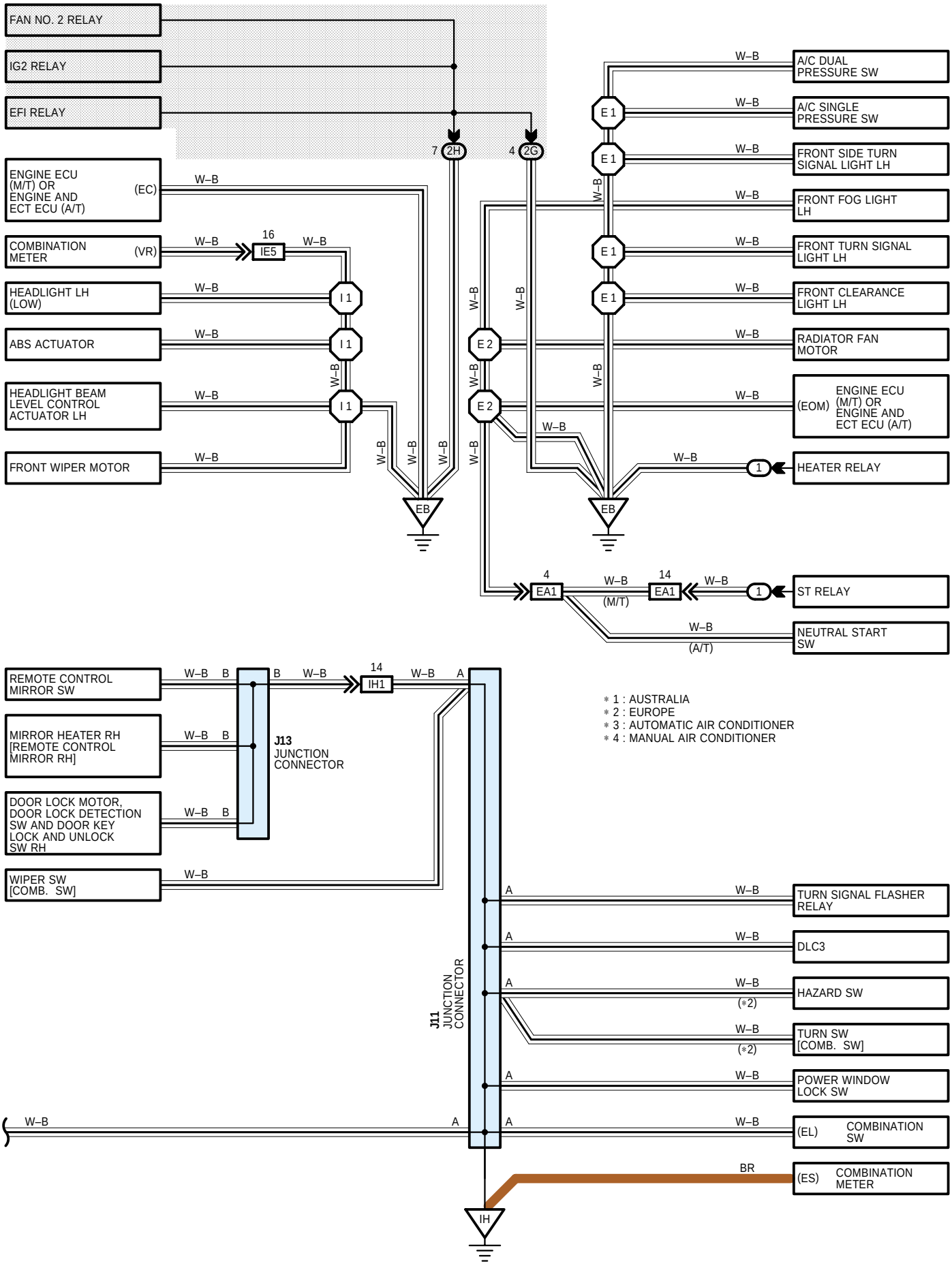
FAN NO. 2 RELAY
IG2 RELAY
EFI RELAY
7 2H
4 2G
ENGINE ECU (M/T) OR ENGINE AND ECT ECU (A/T)
(EC)
COMBINATION METER
(VR)
16
IE5
HEADLIGHT LH (LOW)
ABS ACTUATOR
HEADLIGHT BEAM LEVEL CONTROL ACTUATOR LH
FRONT WIPER MOTOR
I 1
E 1
E 2
EB
W–B
A/C DUAL PRESSURE SW
A/C SINGLE PRESSURE SW
FRONT SIDE TURN SIGNAL LIGHT LH
FRONT FOG LIGHT LH
FRONT TURN SIGNAL LIGHT LH
FRONT CLEARANCE LIGHT LH
RADIATOR FAN MOTOR
(EOM)
ENGINE ECU (M/T) OR ENGINE AND ECT ECU (A/T)
HEATER RELAY
1
4
EA1
14
(M/T)
ST RELAY
NEUTRAL START SW
(A/T)
REMOTE CONTROL MIRROR SW
MIRROR HEATER RH [REMOTE CONTROL MIRROR RH]
DOOR LOCK MOTOR, DOOR LOCK DETECTION SW AND DOOR KEY LOCK AND UNLOCK SW RH
WIPER SW [COMB. SW]
B
IH1
A
J13 JUNCTION CONNECTOR
J11 JUNCTION CONNECTOR
∗ 1 : AUSTRALIA
∗ 2 : EUROPE
∗ 3 : AUTOMATIC AIR CONDITIONER
∗ 4 : MANUAL AIR CONDITIONER
TURN SIGNAL FLASHER RELAY
DLC3
HAZARD SW
(∗2)
TURN SW [COMB. SW]
POWER WINDOW LOCK SW
(EL)
COMBINATION SW
BR
(ES)
COMBINATION METER
IH

I GROUND POINT (RHD)

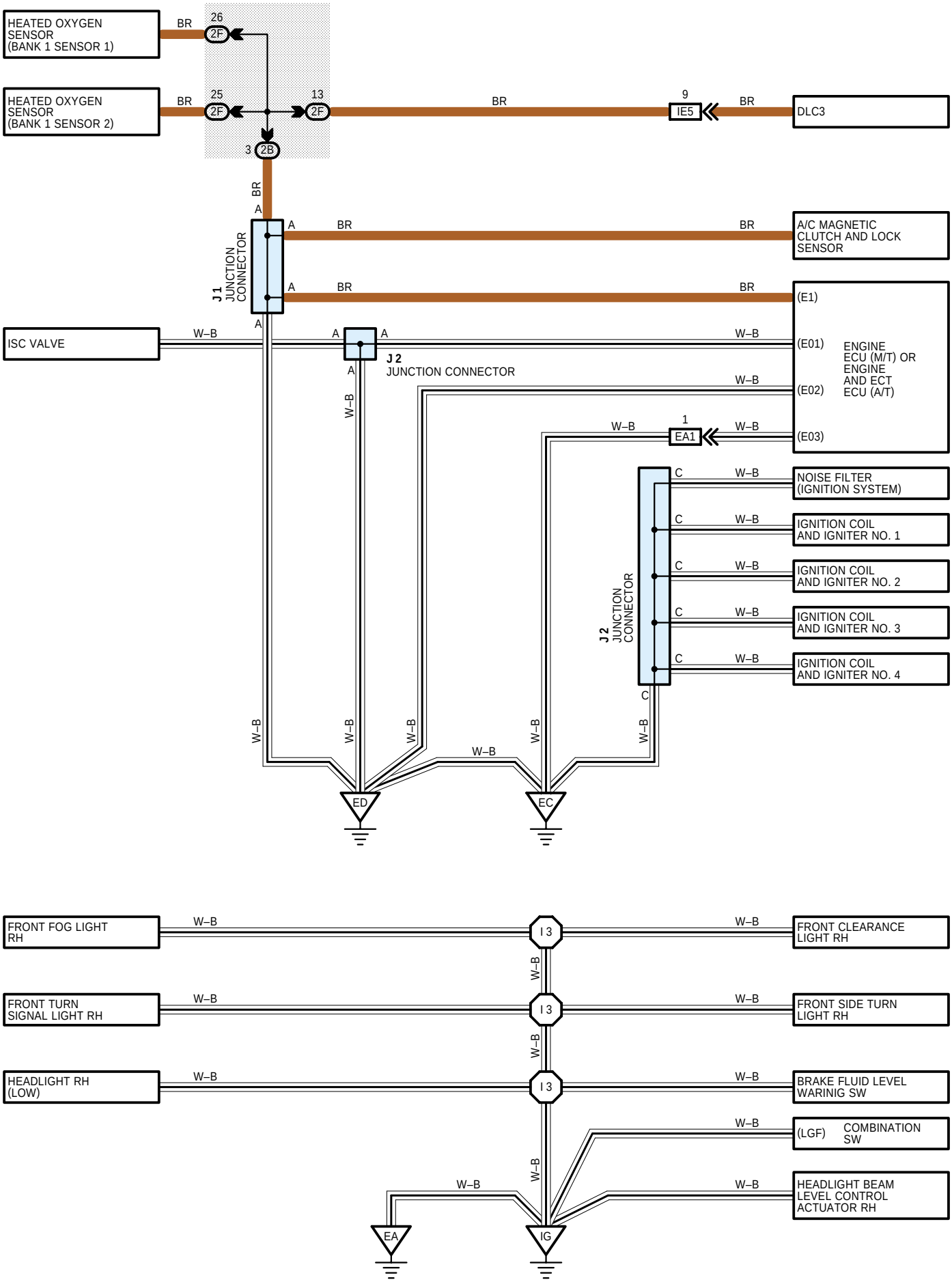

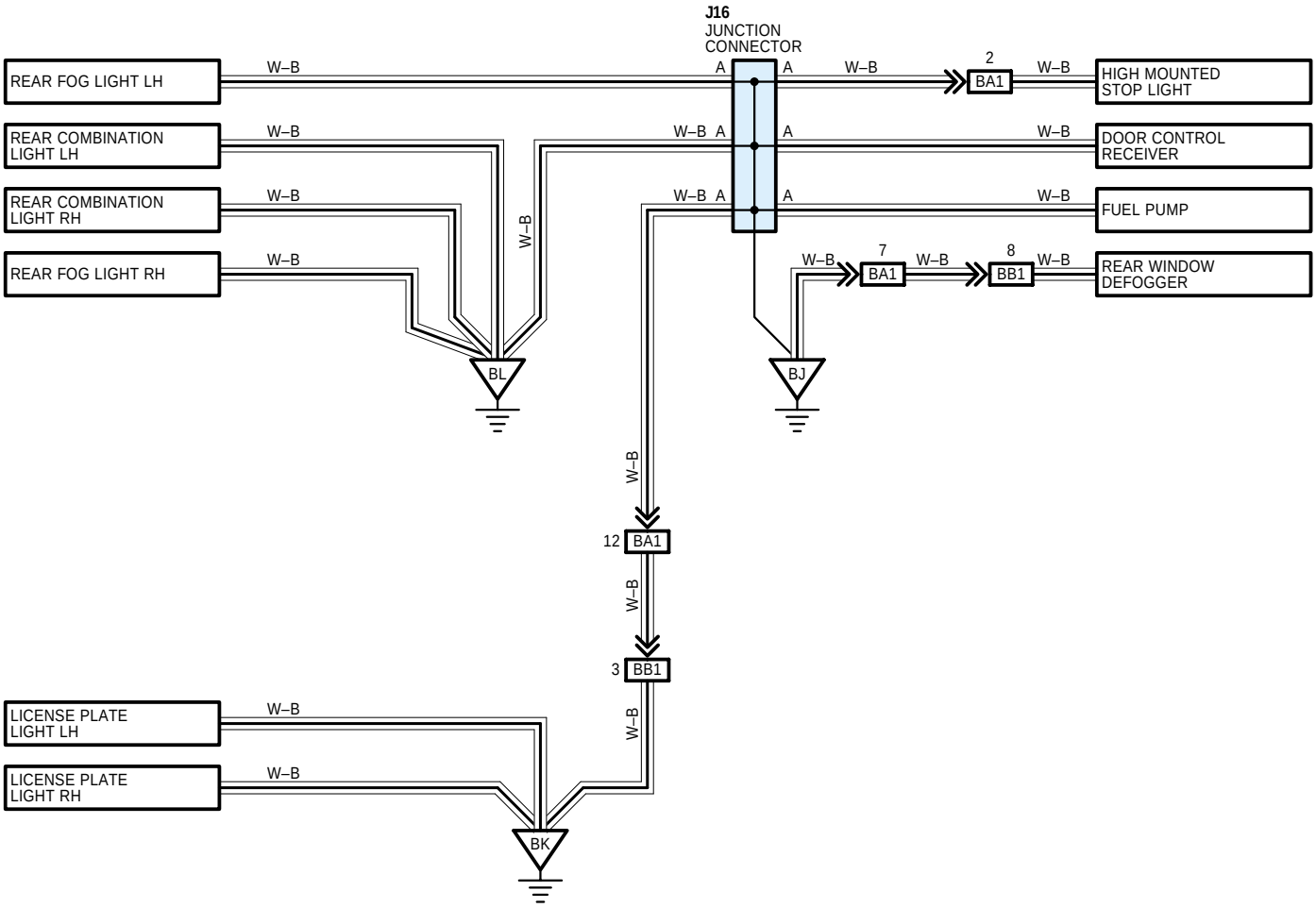
J16
JUNCTION
CONNECTOR
REAR FOG LIGHT LH
REAR COMBINATION
LIGHT LH
REAR COMBINATION
LIGHT RH
REAR FOG LIGHT RH
W–B
A
2
BA1
HIGH MOUNTED
STOP LIGHT
DOOR CONTROL
RECEIVER
FUEL PUMP
7
8
BB1
REAR WINDOW
DEFOGGER
BL
BJ
12
3
LICENSE PLATE
LIGHT LH
LICENSE PLATE
LIGHT RH
BK